REVISION RECORD			
LTR	ECO NO.	APPROVED:	DATE:

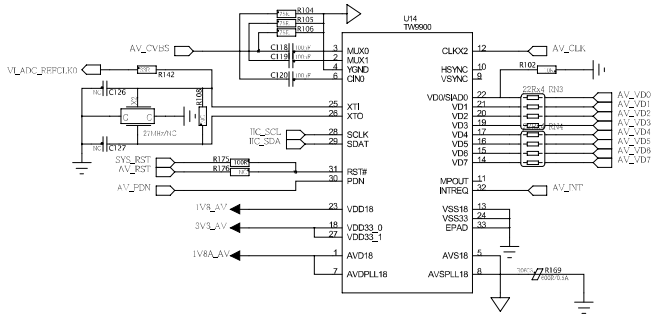

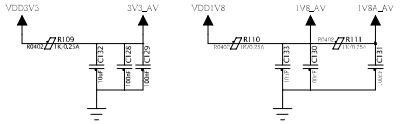

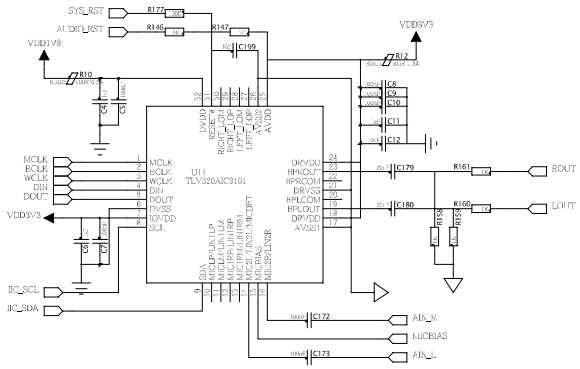

MARKM1

MARKM2

COMPANY:					
TITLE:					
DRAWN: <Drawn By>	DATED: 20210808				
CHECKED: <Checked By>	DATED: <Checked Date>	CODE:	SIZE:	DRAWING NO:	REV:
QUALITY CONTROL: <QC By>	DATED: <QC Date>	<Code>	C	<Drawing Number>	A02
RELEASED: <Released By>	DATED: <Release Date>	SCALE: <Scale>		SHEET: 9 OF 10	

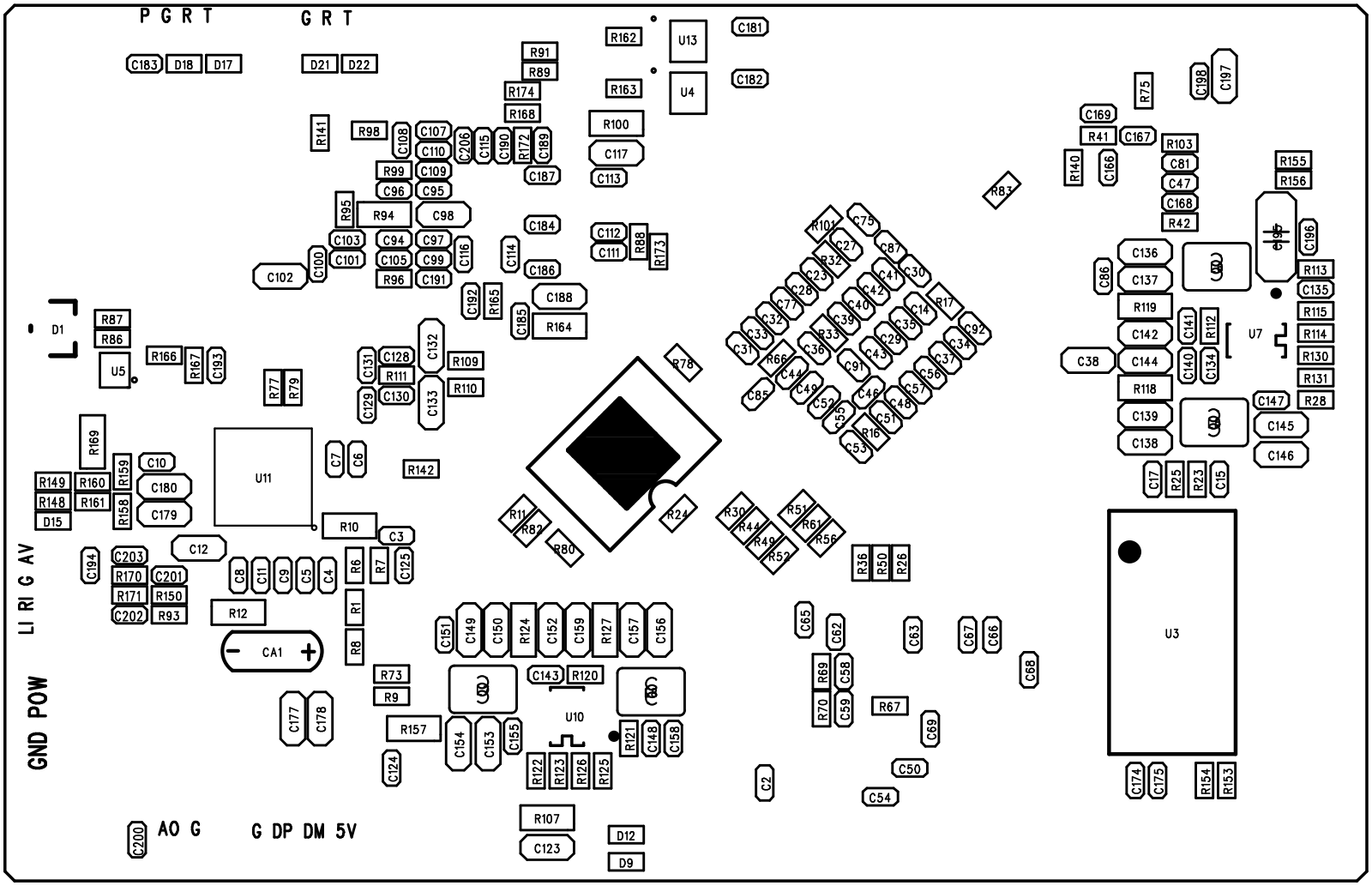

V0.1 210124pcb.pcb - Thu Aug 12 06:50:36 2021

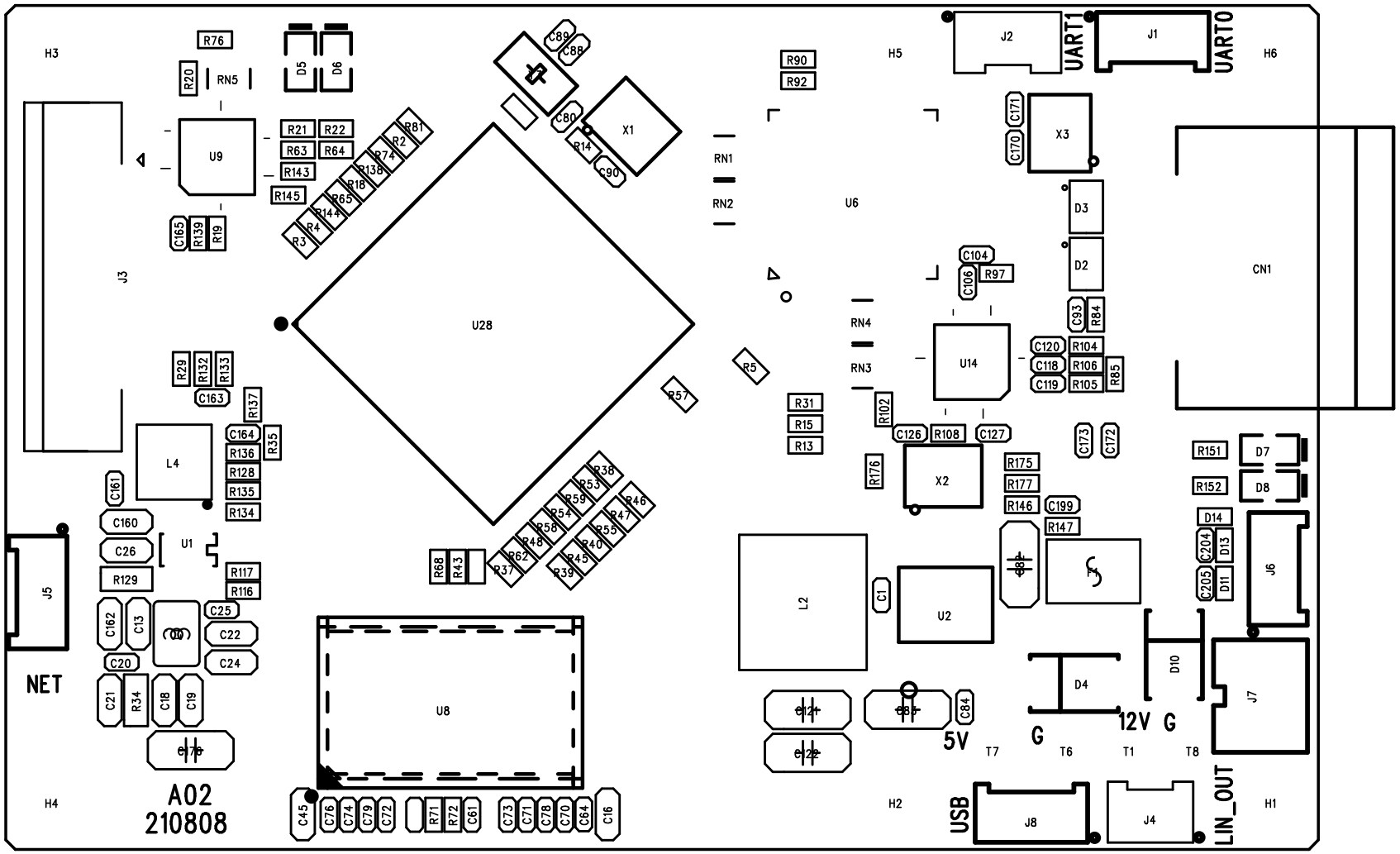

V0.1 210124pcb.pcb – Thu Aug 12 06:49:18 2021